KOHLER®

SERVICE PARTS

零 件 图

柏诗

COMPOSED

2 Handles Wall Mount Sink Faucet Trim

73067T-C9ACH 双把墙出水脸盆龙头_不含阀芯－琥珀金琉璃把手
73067T-C9GCH 双把墙出水脸盆龙头_不含阀芯－水墨灰琉璃把手

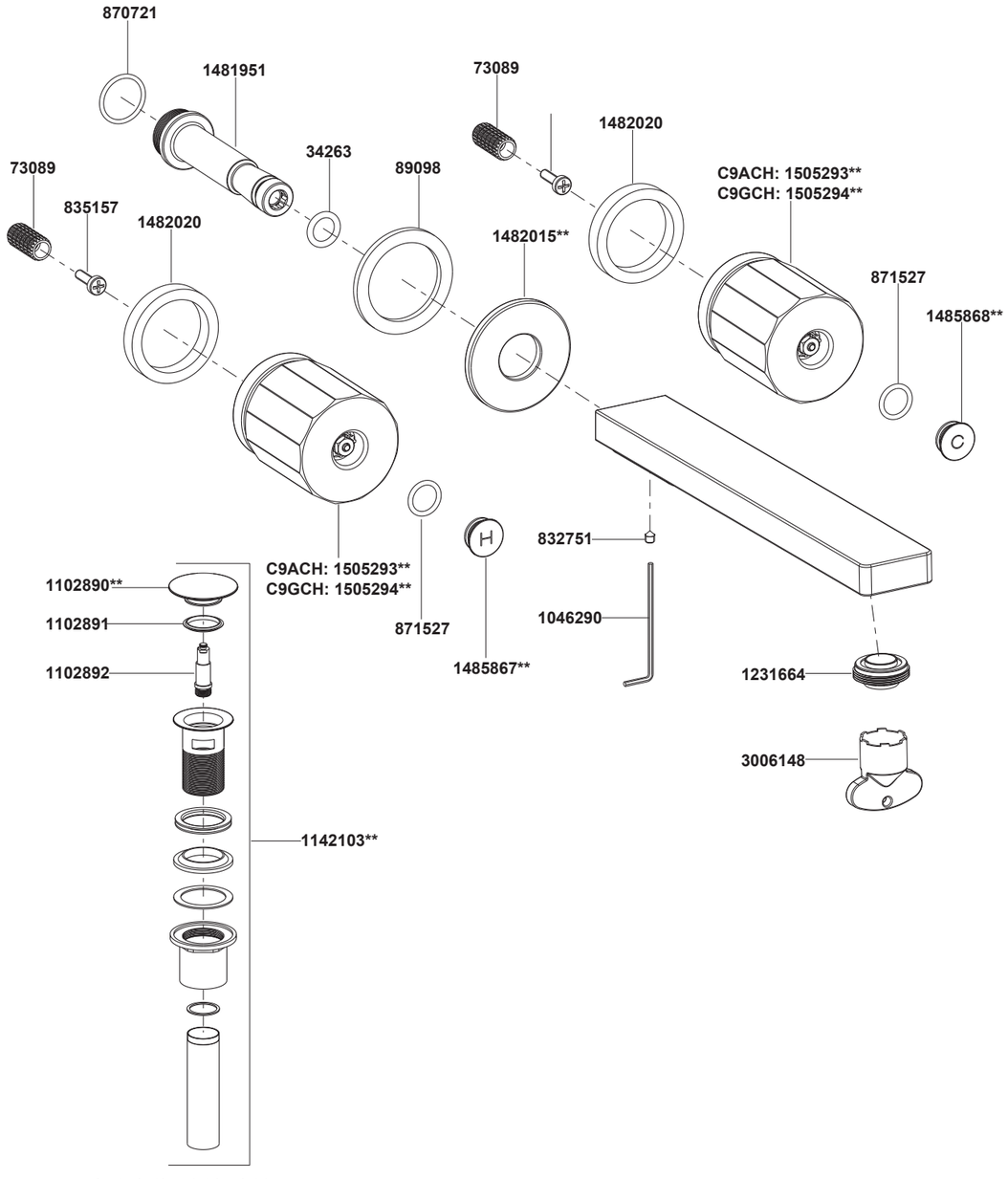

**订购时请说明颜色编号
**Color code must be specified when ordering

KOHLER®

INSTALLATION INSTRUCTIONS

安装说明书

柏诗

COMPOSED

2 Handles Wall Mount Sink Faucet Trim

73067T-C9ACH 双把墙出水脸盆龙头_不含阀芯－琥珀金琉璃把手
73067T-C9GCH 双把墙出水脸盆龙头_不含阀芯－水墨灰琉璃把手

安装之前

所有的资料是按最新出版的产品资料编写而成。科勒公司保留任何时候不经通知即可改变产品特性、包装或产品可供类型的权利。

说明书包括重要的安装、保养及清洁方面的内容，请把这些资料交给用户阅读。

注意事项：
1. 一定要先彻底冲洗供水管以清除管道中的杂质。
2. 检查供水管有无损坏和漏水。如需要，替换和维修之。
3. 遵守当地管路安装条例。
4. 本产品需与双把墙出水脸盆龙头阀芯34667T-NA搭配使用。
5. 确保安装此产品之前，双把墙出水脸盆龙头阀芯34667T-NA已安装完毕。
6. 禁止用60°C以上热水的浇把手，否则可能导致把手开裂。
7. 禁止用硬物撞击把手，否则可能导致把手开裂。
8. 禁止用酒精等有机溶剂擦拭把手。
9. 水嘴加施的水效标识表明本产品的水效等级等性能符合GB25501-2019《水嘴水效限定值及水效等级》的要求，是产品符合性的一种标识。

BEFORE YOU BEGIN

All information is based on the latest product information available at the time of publication. Kohler Co. reserves the right to make changes in product characteristics, packaging, or availability at any time without notice.
Please leave these instructions for the consumer.
They contain important information.

NOTES:
1. Flush the water supply pipes thoroughly to remove debris.
2. Inspect the supply tubing for damage and leakage. Replace and maintain as necessary.
3. Observe local plumbing codes.
4. These products should match with the wall mount lavatory faucet valve 34667T-NA.
5. Install the wall mount lavatory faucet valve 34667T-NA before installing these products.
6. Do not pour hot water above 60ºC into the handle, or it may become cracking.
7. Do not hit the handle with hard objects, or it may become cracking.
8. Do not use alcohol and other organic solvents to wipe the handle.
9. The water efficiency label applied to the faucet indicates that the water efficiency grade and other performance of the product meet the requirements of GB 25501-2019 "Minimum Allowable Values of Water Efficiency and Water Efficiency Grades for Faucets" which is a marking of product conformity.

安装尺寸 / ROUGH-IN DIMENSIONS

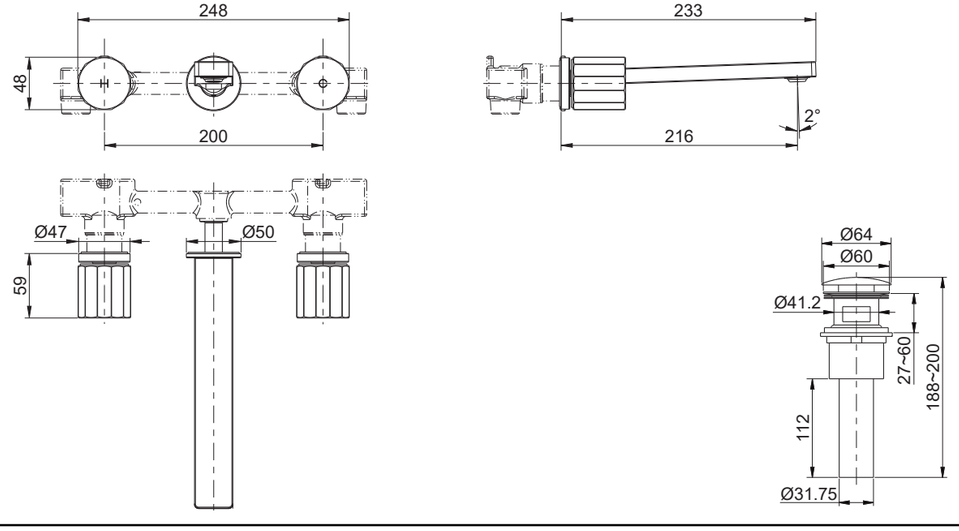

安装步骤 INSTALLATION

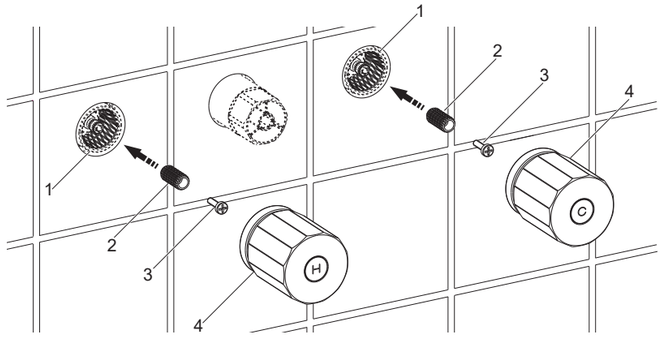

如何安装把手

墙壁装修好后，去掉34667T-NA上的阀体保护套。

将齿套(2)安装到阀芯(1)上，用螺钉(3)锁紧。确保阀芯处于关闭状态。将把手(4)安装到齿套上，并旋转把手底座直至与墙面接触。

注意：带有“H”标记的把手装左侧，带有“C”标记的把手装在右侧。

How to Install the Handles

Remove the valves protectors from 34667T-NA after the wall is finished.

Install the stems(2) onto the valves(1), and then tighten them with screws(3). Ensure the valves are closed. Slide the handles(4) onto the stems and screw handle bases until they are against the finished wall.

NOTE: The handle with mark “H” mark should be installed on the left side. The handle with “C” mark should be installed on the right side.

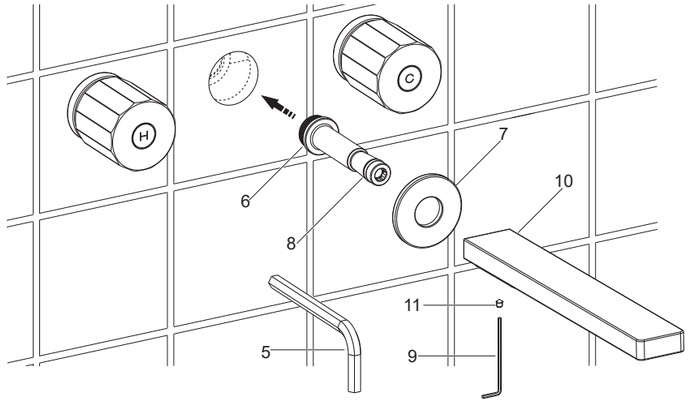

如何安装出水口

去掉34667T-NA上的出水口保护套。

用8mm六角扳手(5, 用户自备)将接头(6)旋紧到阀体上。将装饰盖(7)装到接头上并贴紧墙面。
注意：不要划伤接头上的O型圈(8)。

用2mm六角扳手(9)旋松出水口(10)的底部螺钉(11)。将出水口出口朝下安装到接头上，使其紧贴装饰盖，锁紧螺钉，固定出水口。

How to Install the Spout

Remove the spout protector from 34667T-NA after the wall is finished.

Screw the connector(6) into the valve body with 8mm hex wrench(5, not provided). Install the escutcheon(7) onto the connector until it is against the finished wall.
NOTE: Don’t damage the O-ring(8) on the connector.

Loosen the screw(11) in the spout(10) bottom with 2mm hex wrench(9). Install the spout onto the connector with its outlet downwards until it is against the connector. Tighten the screw to secure the spout.

阀芯处于关闭位置时，出水口和把手安装完毕状态如图所示。

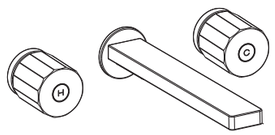

When the installation is completed, the correct position of the spout and handles with the valve closed is shown in the figure.

如何安装排水器

把锁紧螺母(12)、塑料垫片(13)、橡胶垫圈(14)和尾管(15)从排水本体(16)依次取下。在尾管螺纹处须缠绕足以密封的密封胶带或涂合适的密封胶，并装回排水本体。

把排水本体从脸盆上部孔插入。再依次将橡胶垫圈(小面朝上)、塑料垫片和锁紧螺母从脸盆下方装回到排水本体上。锁紧螺母。

注意：如果需要，可直接在法兰盘(17)底面沿周围涂一圈密封油灰或其它密封剂，而不使用橡胶垫片(18)。

在锁紧螺母拧紧后，不可调整排水本体位置，否则会破坏油灰或密封剂密封。

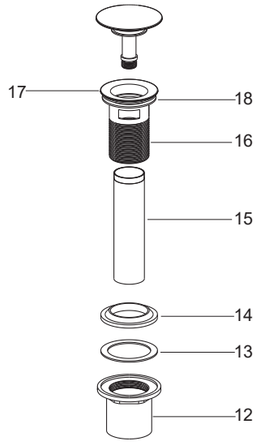

How to Install the Drain

Remove the locknut(12), plastic washer (13), rubber gasket(14) and tailpiece(15) from the drain body(16). Supply enough tape or sealant to tailpiece thread. Reinstall the tailpiece.

Insert the drain body into the lavatory. Install the rubber gasket(Tapered side up), plastic washer and locknut back to the drain body in turn. Tighten the locknut.

NOTE: If needed, apply a ring of plumbers putty or other sealants around the underside of the drain flange(17), instead of using rubber washer(18).

Do not reposition the drain after the locknut is tightened, or you may break the putty or sealant seal.

安装结果检查 INSTALLATION CHECKOUT

检查并确保所有衔接螺母都已拧紧，确保把手在关闭位置。

打开排水器和主要供水源，检查是否有漏水。如有漏水，修理之。

用工具(19)拆下起泡器(20)。打开水龙头冷热水，让水流出约一分钟以清除杂质，检查渗漏。冲洗起泡器，关闭水龙头，重新装回起泡器。

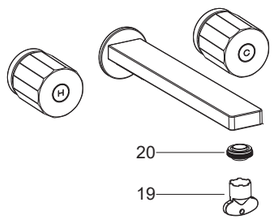

Ensure that all connections are tighten. Ensure the handles are in the off position.

Turn on the drain and main water supply, and check for leaks. Repair as needed.

Remove the aerator(20) with tool(19). Turn on the faucet. Run hot and cold water through the spout for about one minute to remove any debris. Check for leaks. Remove any debris from the aerator. Shut off the faucet. Reinstall the aerator.

使用说明 HANDLE OPERATION

顺时针旋转左把手为热水，逆时针旋转右把手为冷水。

Turn the left handle clockwise for hot water, turn the right handle counter-clockwise for cold water.

清洗说明 CLEANING INSTRUCTIONS

适用于所有加工处理过的表面：以中性肥皂水清洗镀层表面，再以干净的软布彻底擦干整个表面，许多清洁剂，比如氨水、去污粉及洁厕灵等，会对电镀表面造成伤害，切忌使用。

有磨损性的清洁用具或清洁剂也不可使用于科勒牌的水龙头及其配件上。

All Finishes: Clean the finish with mild soap and warm water. Wipe entire surface completely dry with clean soft cloth. Many cleaners may contain chemicals, such as ammonia, chlorine, toilet cleaner etc. which could adversely affect the finish and are not recommended for cleaning.

Do not use abrasive cleaners or solvents on Kohler faucets and fittings.